SERIES: TECHLINE

MODEL NUMBER: TS402

DESCRIPTION: TWO PANEL, 4 LAMP, SURFACE MOUNT CONFIGURATION

FRONT VIEW

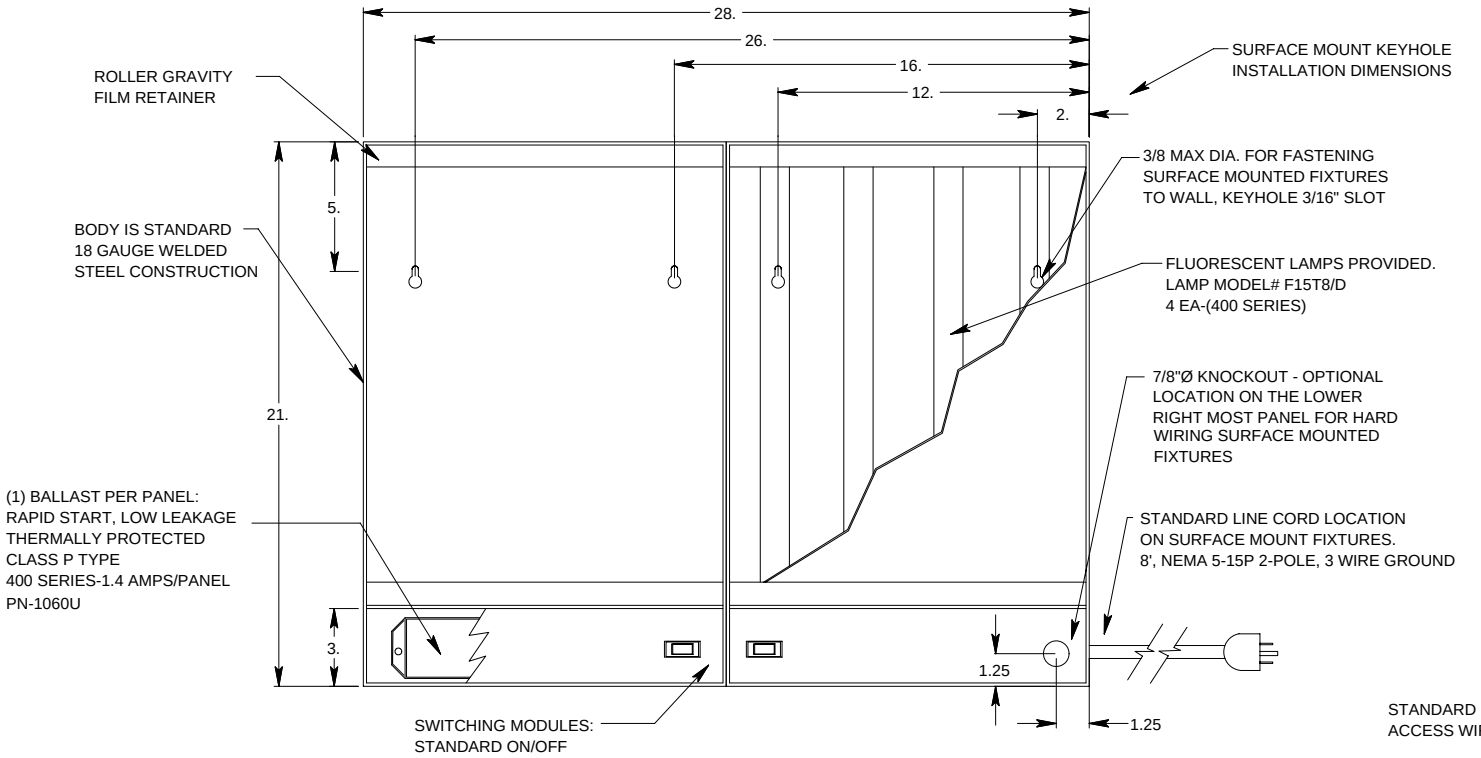

RIGHT SIDE

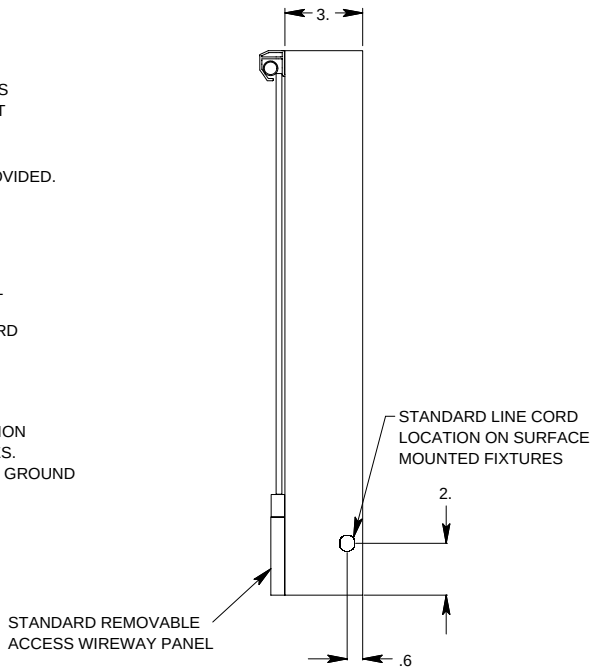

MAXANT TECHNOLOGIES, INC.
7540 CALDWELL AVE.
NILES, IL. 60714
(800) 307-4190